# Work Order ID 71739

*Monday, July 11, 2011 11:11:32 AM*



**Item ID:** D4277-11 **Accept** **Setup Start**

**Revision ID:** **Stop**

**Item Name:** Rib

**Start Date:** 7/11/2011 **Start Qty:** 2.00 **Cust Item ID:**

**Required Date:** 7/21/2011 **Req'd Qty:** 2.00 **Customer:**

**Reference:**

**Approvals:** **Process Plan:** P **Date:** 11-07-11 **Tooling:** _____ **Date:** _____ **Run Start**

**QC:** _____ **Date:** _____ **SPC (Y/N):** _____ **Date:** _____ **Stop**

| Sequence ID/ Work Center ID | Operation Description | Set Up/ Run Hours | Tool ID | Tool # | Plan Code | Accept Qty | Reject Qty | Reject Number | Insp. Stamp |
|---|---|---|---|---|---|---|---|---|---|
| **Draw Nbr** | **Revision Nbr** | | | | | | | | |
| D4277 | D | | | | | | | | |
| 100 | | 0.00 | | | | | | | |
| Large Fab | **Memo** | 0.00 | | | | 2 | | | |
| Large Fab | 1- Cut tube at 26.00"with the 45 degree angle<br>2- Remove marking<br>3- On manual bender, bend as per dwg<br>4- Cut to size, 63 degree as per dwg<br>5- Deburr | SAO 11-07-14 | | | | | | | |
| 110 | QC6- Inspect dimensions to drawing | 0.00 | | | | | | | |
| QC | **Memo** | 0.00 | | | | | | | |
| Quality Control | | | | | | | | | |

PAC 11-07-14

Dart Aerospace Ltd

| W/O: | | WORK ORDER CHANGES | | | | | |
|---|---|---|---|---|---|---|---|
| DATE | STEP | PROCEDURE CHANGE | By | Date | Qty | Approval Chief Eng / Prod Mgr | Approval QC Inspector |
| | | | | | | | |
| | | | | | | | |

**Part No:** _____ **PAR #:** _____ **Fault Category:** _____ **NCR:** Yes No **DQA:** _____ **Date:** _____

**Resolution:** _____ **Disposition:** _____ **QA: N/C Closed:** _____ **Date:** _____

| NCR: | | WORK ORDER NON-CONFORMANCE (NCR) | | | | | | |
|---|---|---|---|---|---|---|---|---|
| DATE | STEP | Description of NC Section A | Corrective Action Section B | | | Verification Section C | Approval Chief Eng | Approval QC Inspector |
| | | | Initial Chief Eng | Action Description Chief Eng | Sign & Date | | | |
| | | | | | | | | |
| | | | | | | | | |
| | | | | | | | | |

**NOTE:** Date & initial all entries

# Work Order ID 71739

*Monday, July 11, 2011 11:11:32 AM*



**Item ID:** D4277-11
**Revision ID:**
**Item Name:** Rib

**Accept**

**Setup** **Start**
**Stop**

**Start Date:** 7/11/2011 **Start Qty:** 2.00
**Required Date:** 7/21/2011 **Req'd Qty:** 2.00
**Reference:**

**Cust Item ID:**
**Customer:**

**Approvals:** **Process Plan:** _____ **Date:** _____ **Tooling:** _____ **Date:** _____
**QC:** _____ **Date:** _____ **SPC (Y/N):** _____ **Date:** _____

**Run** **Start**
**Stop**

| Sequence ID/ Work Center ID | Operation Description | Set Up/ Run Hours | Tool ID | Tool # | Plan Code | Accept Qty | Reject Qty | Reject Number | Insp. Stamp |
|---|---|---|---|---|---|---|---|---|---|
| 120 | Identify as per dwg & Stock Location: B/C | 0.00 | | | | GC 11.07.14 | | | |
| Packaging | | | | | | | | | |
| | **Memo** | 0.00 | | | | | | | |
| Packaging | ***STOCK IN BASKET CELL*** | | | | | | | | |
| 130 | QC21- Final Inspection - Work Order Release | 0.00 | | | | | | 11/7/15 | |
| QC | | | | | | | | | |
| | **Memo** | 0.00 | | | | | | | |
| Quality Control | | | | | | | | | |

MF 11-07-15

Dart Aerospace Ltd

| W/O: | | WORK ORDER CHANGES | | | | | |
|---|---|---|---|---|---|---|---|
| DATE | STEP | PROCEDURE CHANGE | By | Date | Qty | Approval Chief Eng / Prod Mgr | Approval QC Inspector |
| | | | | | | | |
| | | | | | | | |

**Part No:** _____ **PAR #:** _____ **Fault Category:** _____ **NCR:** Yes No **DQA:** _____ **Date:** _____

**Resolution:** _____ **Disposition:** _____ **QA: N/C Closed:** _____ **Date:** _____

| NCR: | | WORK ORDER NON-CONFORMANCE (NCR) | | | | | | |
|---|---|---|---|---|---|---|---|---|
| DATE | STEP | Description of NC Section A | Corrective Action Section B | | | Verification Section C | Approval Chief Eng | Approval QC Inspector |
| | | | Initial Chief Eng | Action Description Chief Eng | Sign & Date | | | |
| | | | | | | | | |
| | | | | | | | | |
| | | | | | | | | |

**NOTE:** Date & initial all entries

# Picklist Print

*Monday, July 11, 2011 11:11:38 AM*



**Work Order ID:** 71739

**Parent Item:** D4277-11

**Parent Item Name:** Rib

**Start Date:** 7/11/2011 **Required Date:** 7/21/2011

**Start Qty:** 2.00 **Required Qty:** 2.00

**Comments:** IPP Rev:A 10.11.12 new issue DD verf:EC IPP Rev:B
11.01.20 AS PER DWG REV.C DD verf:EC

| Component Item ID/ Item Name | Replacement Item ID | Mfg/ Purch | Bin Item | Primary Location | Last Location | Route Seq ID | Unit of Measure | Qty on Hand | Qty per Kit | Total Qty | Qty Issued | Date Issued | Status |
|---|---|---|---|---|---|---|---|---|---|---|---|---|---|
| M304TS0.500W.049<br>Square Tubing | | Purchased | No | | | 100 | f | 736.7760 | 2.1666 | 4.561263<br>SAD 11-07-14 | | | |

| Location | Loc Qty | Loc Code |
|---|---|---|
| MAT034 | 736.776 | |
| 116610 | 0.8383 | |
| 117721 | 131.9377 | |
| 117999 | 604 | |

4.5613

Dart Aerospace Ltd

| W/O: | | WORK ORDER CHANGES | | | | | |
|---|---|---|---|---|---|---|---|
| DATE | STEP | PROCEDURE CHANGE | By | Date | Qty | Approval Chief Eng / Prod Mgr | Approval QC Inspector |
| | | | | | | | |
| | | | | | | | |

**Part No:** _____ **PAR #:** _____ **Fault Category:** _____ **NCR:** Yes No **DQA:** _____ **Date:** _____

**Resolution:** _____ **Disposition:** _____ **QA: N/C Closed:** _____ **Date:** _____

| NCR: | | WORK ORDER NON-CONFORMANCE (NCR) | | | | | | |
|---|---|---|---|---|---|---|---|---|
| DATE | STEP | Description of NC Section A | Corrective Action Section B | | | Verification Section C | Approval Chief Eng | Approval QC Inspector |
| | | | Initial Chief Eng | Action Description Chief Eng | Sign & Date | | | |
| | | | | | | | | |
| | | | | | | | | |
| | | | | | | | | |

**NOTE:** Date & initial all entries

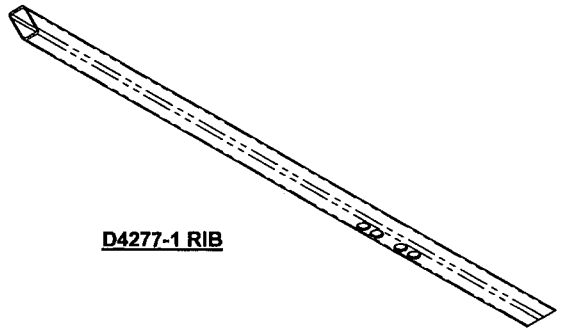

D4277-1 RIB

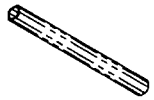

D4277-3 RIB

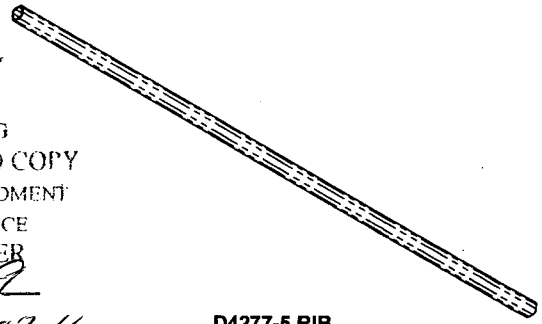

D4277-5 RIB

SHOP COPY
RETURN TO
ENGINEERING
UNCONTROLLED COPY
SUBJECT TO AMENDMENT
WITHOUT NOTICE
WORK ORDER
NO. 71739

11-02-11

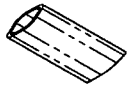

D4277-7 RIB

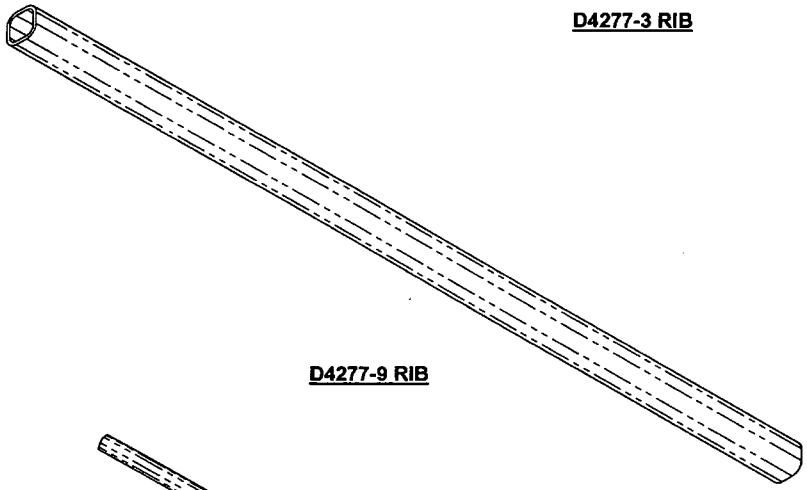

D4277-9 RIB

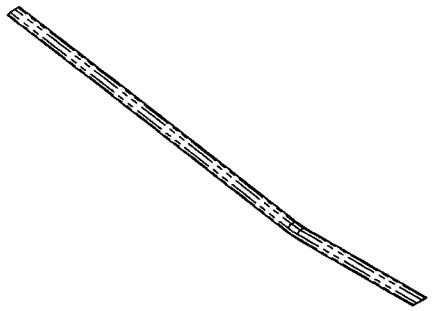

D4277-11 RIB

RELEASED
2011-02-24

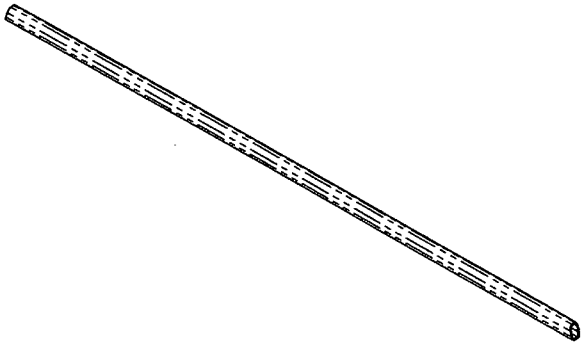

D4277-19 RIB

D

| REV. | DESCRIPTION | BY | DATE |
|---|---|---|---|
| D | CHANGED ANGLE FROM 71° TO 61° (B3-3) | SC | 11.02.09 |
| C | D4277-19 RIB ADDED, ADDITIONAL HOLES ADDED IN D4277-1 | SC | 10.12.23 |
| B | RMV -13/-15/-17 (OBSOLETE); -3: 8.09 WAS 20.25 (C5-2); -9: 13.50 WAS 2.00 (B4-2), -5: 24.25 WAS 28.25 (B5-2) | CP | 10.11.30 |
| A | NEW ISSUE | SC | 10.11.25 |

| | | |
|---|---|---|
| DESIGN | JPH | **DART AEROSPACE LTD** HAWKESBURY, ONTARIO, CANADA |
| DRAWN | SC | |
| CHECKED | | DRAWING NO. D4277 — REV. D — SHEET 1 OF 3 |
| MFG. APPR. | | |
| APPROVED | | TITLE RIBS — SCALE NTS |
| DE APPR. | | |
| DATE | 11.02.09 | |

COPYRIGHT © 2010 BY DART AEROSPACE LTD
THIS DOCUMENT IS PRIVATE AND CONFIDENTIAL AND IS SUPPLIED ON THE EXPRESS CONDITION THAT IT IS NOT TO BE USED FOR ANY PURPOSE OR COPIED OR COMMUNICATED TO ANY OTHER PERSON WITHOUT WRITTEN PERMISSION FROM DART AEROSPACE LTD.

Dart Aerospace Ltd

| W/O: | | WORK ORDER CHANGES | | | | | |
|---|---|---|---|---|---|---|---|
| DATE | STEP | PROCEDURE CHANGE | By | Date | Qty | Approval Chief Eng / Prod Mgr | Approval QC Inspector |
| | | | | | | | |
| | | | | | | | |

**Part No:** _____ **PAR #:** _____ **Fault Category:** _____ **NCR:** Yes No **DQA:** _____ **Date:** _____

**Resolution:** _____ **Disposition:** _____ **QA: N/C Closed:** _____ **Date:** _____

| NCR: | | WORK ORDER NON-CONFORMANCE (NCR) | | | | | | |
|---|---|---|---|---|---|---|---|---|
| DATE | STEP | Description of NC Section A | Corrective Action Section B | | | Verification Section C | Approval Chief Eng | Approval QC Inspector |
| | | | Initial Chief Eng | Action Description Chief Eng | Sign & Date | | | |
| | | | | | | | | |
| | | | | | | | | |
| | | | | | | | | |

**NOTE:** Date & initial all entries

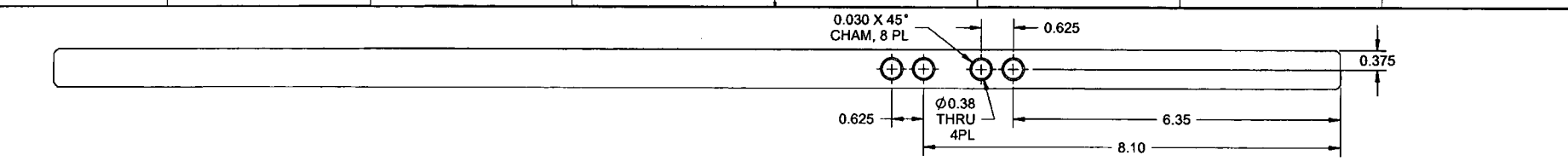


**D4277-1 RIB**

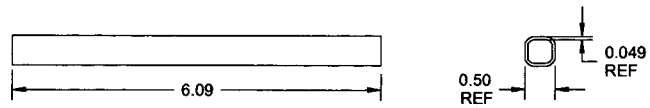


**D4277-3 RIB**

71739

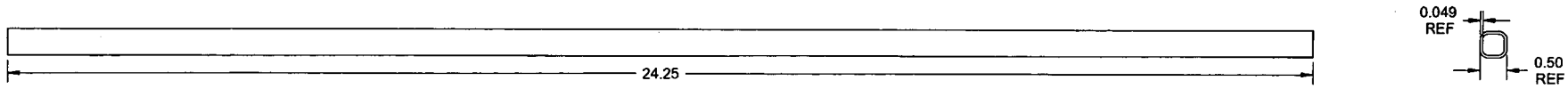


**D4277-5 RIB**

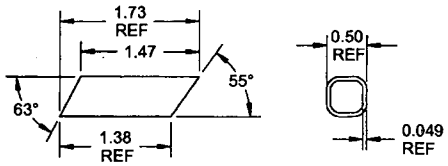


**D4277-7 RIB**

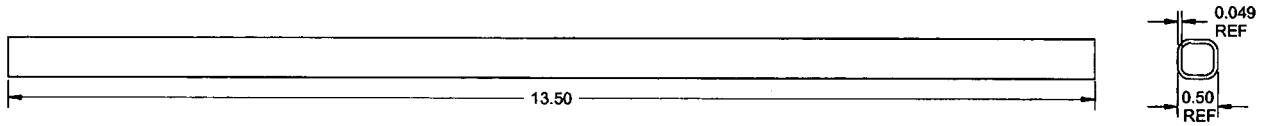


**D4277-9 RIB**

RELEASED
2011-02-24

NOTES:
1) MATERIAL -1: AISI 304/316 STAINLESS STEEL SQUARE TUBE, 0.75 X 0.75 X 0.049 WALL
REF DART SPEC. M304TS0.750W.049
-3, -5, -7, -9: AISI 304/316 STAINLESS STEEL SQUARE TUBE, 0.50 X 0.50 X 0.049 WALL
REF DART SPEC. M304TS0.500W.049
2) FINISH: NONE
3) TOLERANCES: PER DART QSI 018 UNLESS OTHERWISE NOTED
4) UNITS: INCHES UNLESS OTHERWISE NOTED
5) BREAK SHARP EDGES: 0.005 TO 0.010 MAX
6) IDENTIFICATION: N/A
7) WEIGHT: SEE ASSEMBLED WEIGHTS.

| | | |
|---|---|---|
| DESIGN | JPH | **DART AEROSPACE LTD** HAWKESBURY, ONTARIO, CANADA |
| DRAWN | SC | |
| CHECKED | | DRAWING NO. D4277 — REV. D — SHEET 2 OF 3 |
| MFG. APPR. | | |
| APPROVED | | TITLE RIBS — SCALE NTS |
| DE APPR. | | |
| DATE | 11.02.09 | |

COPYRIGHT © 2010 BY DART AEROSPACE LTD
THIS DOCUMENT IS PRIVATE AND CONFIDENTIAL, AND IS SUPPLIED ON THE EXPRESS CONDITION THAT IT IS NOT TO BE USED FOR ANY PURPOSE OR COPIED OR COMMUNICATED TO ANY OTHER PERSON WITHOUT WRITTEN PERMISSION FROM DART AEROSPACE LTD.

Dart Aerospace Ltd

| W/O: | | WORK ORDER CHANGES | | | | | |
|---|---|---|---|---|---|---|---|
| DATE | STEP | PROCEDURE CHANGE | By | Date | Qty | Approval Chief Eng / Prod Mgr | Approval QC Inspector |
| | | | | | | | |
| | | | | | | | |

**Part No:** _____ **PAR #:** _____ **Fault Category:** _____ **NCR:** Yes No **DQA:** _____ **Date:** _____

**Resolution:** _____ **Disposition:** _____ **QA: N/C Closed:** _____ **Date:** _____

| NCR: | | WORK ORDER NON-CONFORMANCE (NCR) | | | | | | |
|---|---|---|---|---|---|---|---|---|
| DATE | STEP | Description of NC Section A | Corrective Action Section B | | | Verification Section C | Approval Chief Eng | Approval QC Inspector |
| | | | Initial Chief Eng | Action Description Chief Eng | Sign & Date | | | |
| | | | | | | | | |
| | | | | | | | | |
| | | | | | | | | |

**NOTE:** Date & initial all entries

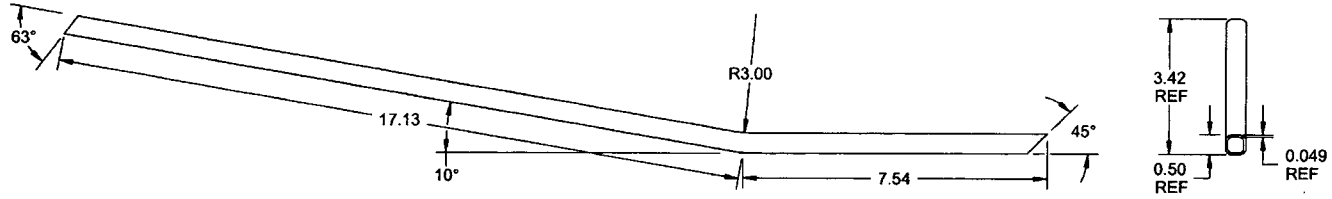


**D4277-11 RIB**

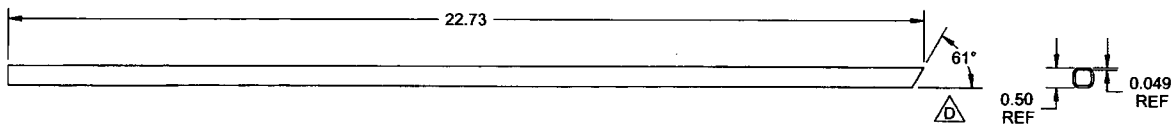


**D4277-19 RIB**

71739

RELEASED
2011-02-24

NOTES:
1) MATERIAL -11, -19: AISI 304/316 STAINLESS STEEL SQUARE TUBE, 0.50 X 0.50 X 0.049 WALL
REF DART SPEC. M304TS0.500W.049
2) FINISH: NONE
3) TOLERANCES: PER DART QSI 018 UNLESS OTHERWISE NOTED
4) UNITS: INCHES UNLESS OTHERWISE NOTED
5) BREAK SHARP EDGES: 0.005 TO 0.010 MAX
6) IDENTIFICATION: N/A
7) WEIGHT: SEE ASSEMBLED WEIGHTS.

| | | |
|---|---|---|
| DESIGN | JPH | **DART AEROSPACE LTD** HAWKESBURY, ONTARIO, CANADA |
| DRAWN | SC | |
| CHECKED | | DRAWING NO. D4277 — REV. D — SHEET 3 OF 3 |
| MFG. APPR. | | |
| APPROVED | | TITLE RIBS — SCALE NTS |
| DE APPR. | | |
| DATE | 11.02.09 | |

COPYRIGHT © 2010 BY DART AEROSPACE LTD
THIS DOCUMENT IS PRIVATE AND CONFIDENTIAL AND IS SUPPLIED ON THE EXPRESS CONDITION THAT IT IS NOT TO BE USED FOR ANY PURPOSE OR COPIED OR COMMUNICATED TO ANY OTHER PERSON WITHOUT WRITTEN PERMISSION FROM DART AEROSPACE LTD.

Dart Aerospace Ltd

| W/O: | | WORK ORDER CHANGES | | | | | |
|---|---|---|---|---|---|---|---|
| DATE | STEP | PROCEDURE CHANGE | By | Date | Qty | Approval Chief Eng / Prod Mgr | Approval QC Inspector |
| | | | | | | | |
| | | | | | | | |

**Part No:** _____ **PAR #:** _____ **Fault Category:** _____ **NCR:** Yes No **DQA:** _____ **Date:** _____

**Resolution:** _____ **Disposition:** _____ **QA: N/C Closed:** _____ **Date:** _____

| NCR: | | WORK ORDER NON-CONFORMANCE (NCR) | | | | | | |
|---|---|---|---|---|---|---|---|---|
| DATE | STEP | Description of NC Section A | Corrective Action Section B | | | Verification Section C | Approval Chief Eng | Approval QC Inspector |
| | | | Initial Chief Eng | Action Description Chief Eng | Sign & Date | | | |
| | | | | | | | | |
| | | | | | | | | |
| | | | | | | | | |

**NOTE:** Date & initial all entries